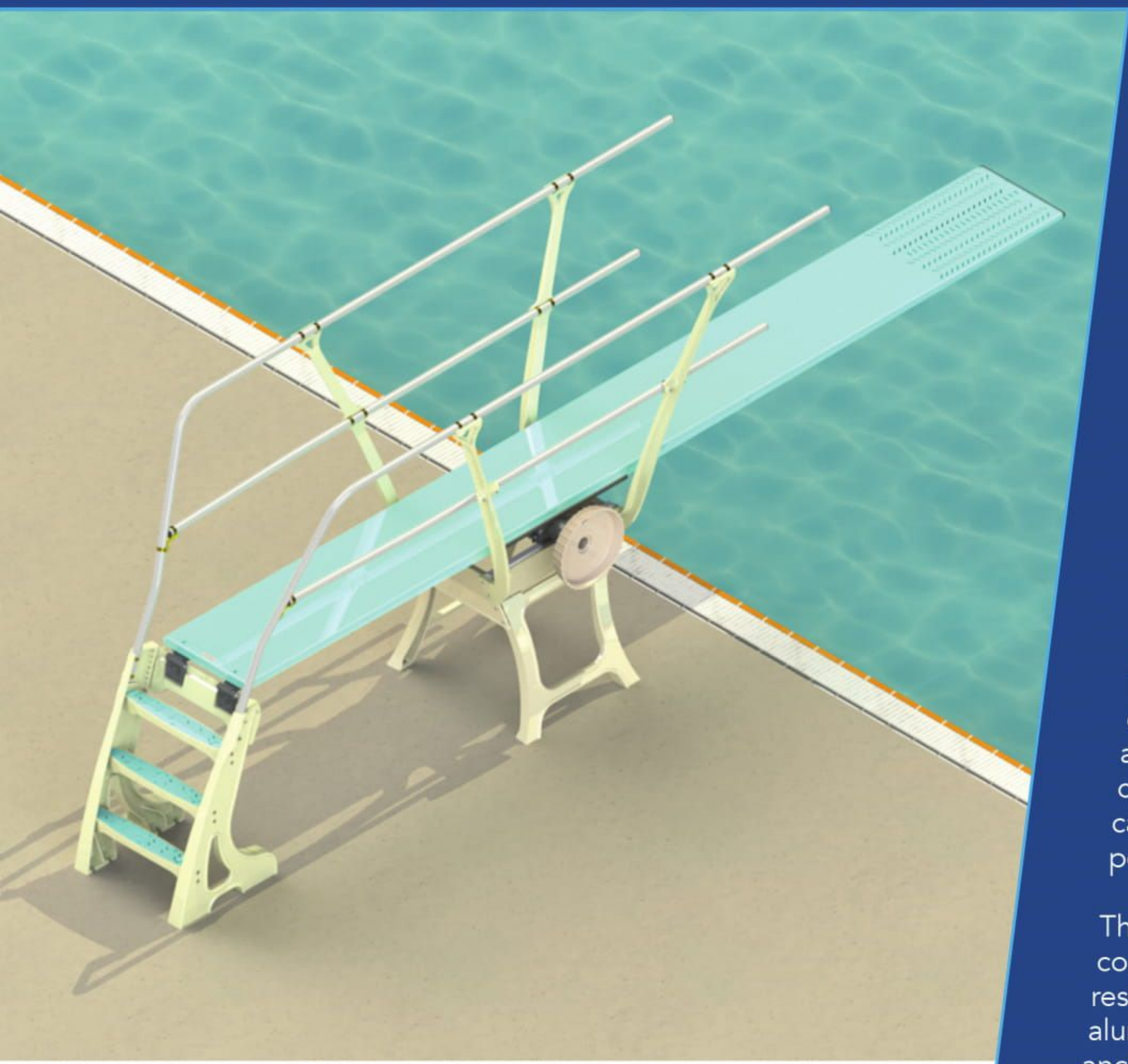

1 METER
STANDS

CATALOG # 70-231-400

The 1-meter Duraflex stand is designed to provide a firm foundation for mounting Duraflex aluminum springboards. The Duraflex stand is the result of design focused on stability, low noise level and ease of installation.

Duraflex stands can easily be installed at an existing pool without the need for costly excavation. The stand consists of a ladder assembly, fulcrum assembly and main support assembly. The major components are heavy duty aluminum castings coated with top quality epoxy powder coating.

The ladder assembly features wide, comfortable steps with replaceable slip-resistant treads. Hard-anodized, forged aluminum hinges mounted to a heavy cast anchor plate provide the attachment points for the Duraflex springboards.

The Duraflex stands have double stainless-steel handrails on both sides. The 1-meter structures are manufactured in five different heights to accommodate various deck to water levels. The deck to water dimension of the pool, deck slope and diving board model must be indicated when ordering. This information is used to determine the correct stand height for your facility. Drawings and CAD files can then be provided.

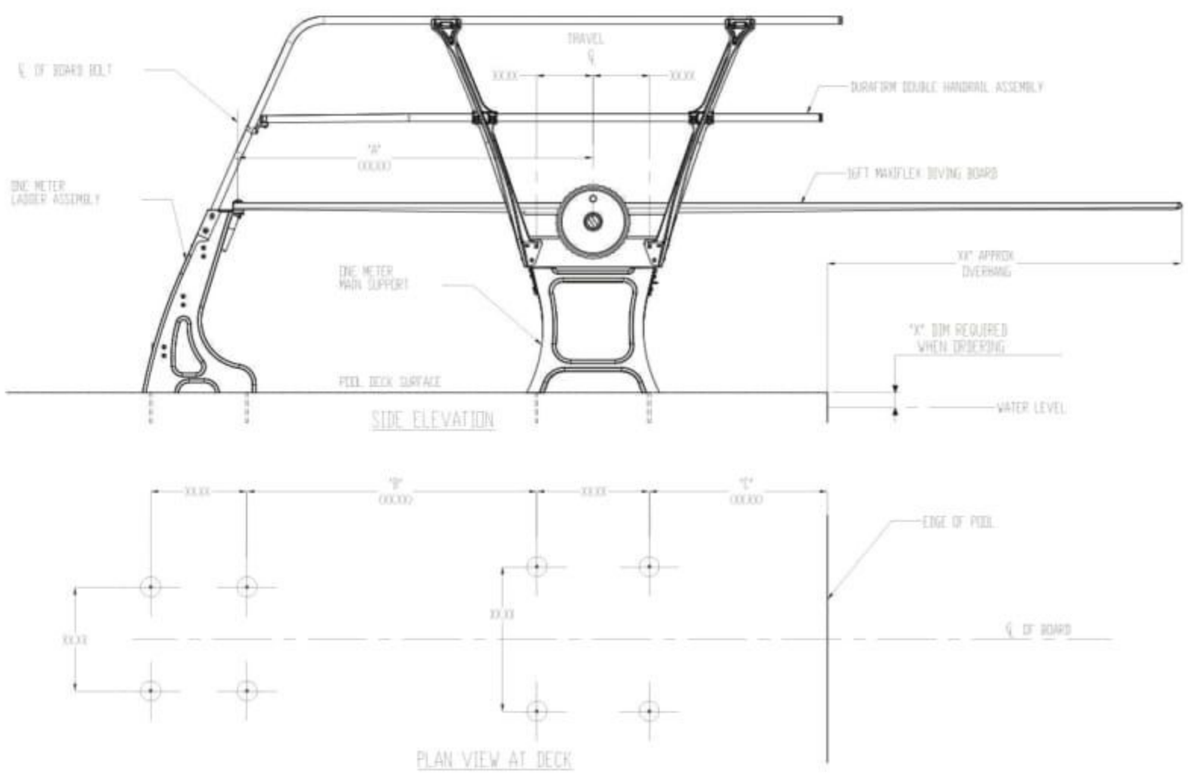

DURAFLEX
Making boards that make champions

Fina | DURAFLEX
OFFICIAL SUPPLIER